RoHS compliant

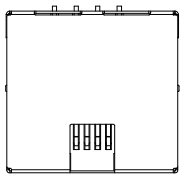

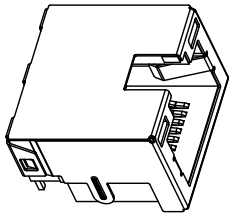

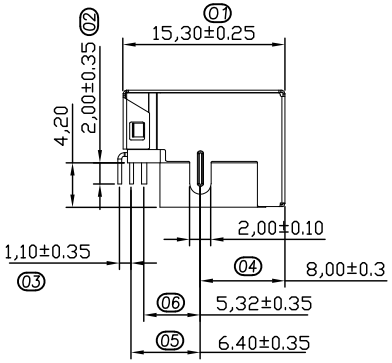

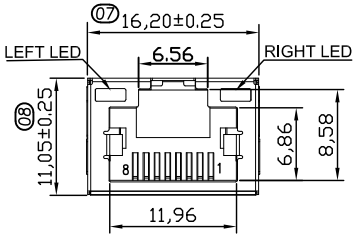

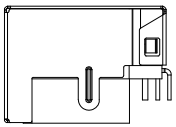

脚位尺寸以过孔规为准

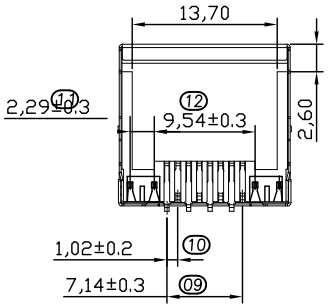

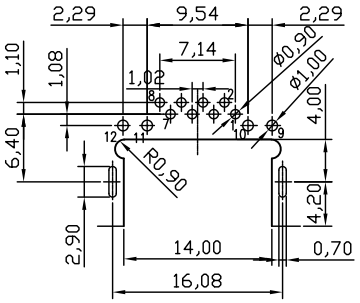

PCBLAYOUT TOP VIEW
TOL:±0.05

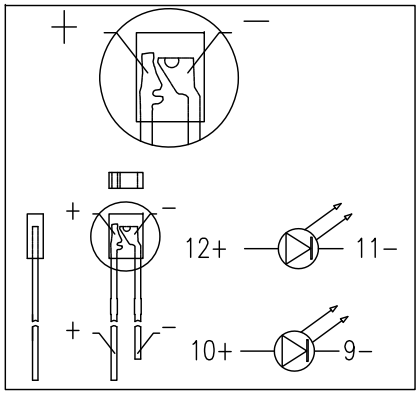

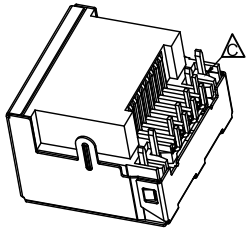

NOTES:
1. HOUSING MATERIAL:GLASS FILLED POLYESTER UL94V-0.
2. CONTACT MATERIAL:COPPER ALLOY,T=0.35.
3. PLATING: GOLD PLATED ON CONTACT AREA, 100u"MIN. TIN PLATED ON SOLDERING AREA, 50u"MIN. NICKEL PLATED OVERALL.
4. SHELL:COPPER ALLOY,T=0.20. 30u"MIN. NICKEL PLATED OVERALL.
5. LED:T=0.50, TIN PLATED.

ELECTRICAL:
1. VOLTAGE RATING: 125V AC RMS.
2. CURRENT RAING: 1.5AMP.
3. CONTACT RESISTANCE: 30MILLIOHMS MAX.
4. INSULATION RESISTANCE: 500MEGOHMS MIN @500V DC.

MECHANICAL:
1. DURRABILITY: 750 CYCLES MIN.
2.INSERTION FORCE : 22N MAX.
3.REMOVAL FORCE(WITHOUT PLUG LOCK) : 22N MAX.

ENVIRONMENTAL:
1. STORAGE: −40°C~85°C
2. OPERATION: 0°C~70°

*Apply to the EU standards(ROSH)
1. 01 ~12 FOR QIP DIM.

P/N:RJ58D-8811-1XX4X3X

LED STYLE
0-R/O LED
1-Y/G
2-G/Y
3-R/G

GOLD PLATING
1-1u
2-1.5u
3-3u
4-6u

COLOR
1-BLACK
2-WHITE
3-RED
4-YELLOW

TAPE REEL
R-TAPE REEL
P-PVC TRAY

REV	ECN NO	DESCRIPTION	DATE	SIGNATURE
A0		NEW DESIGN	2018/05/22	

GENERAL TOLERANCE

.X	±0.35	X.°	± 2°
.XX	±0.25	.X°	± 1°
.XXX	±0.15	.XX°	± 0.5°

PROJECT

DRAWN	Gene Li	2018/05/22	UNIT	MM
CHECKE	GM		SCALE	1:1
APPROVE			SHEET	
DRAWING NO			REV	A0

X-SHUN 东莞市祥舜电子科技有限公司
DONGGUAN X-SHUN ELECTRONICTECHNOLOGY CO., LTD
TEL:+86 769 81885389 FAX:+86 769 81887859
E-Mail:sales@x-shun.com Http:www.x-shun.com

PART NO.	RJ58D-8811-1XX4X3X
TITLE	RJ45 沉板4.2 DIP有壳有灯