RoHS compliant

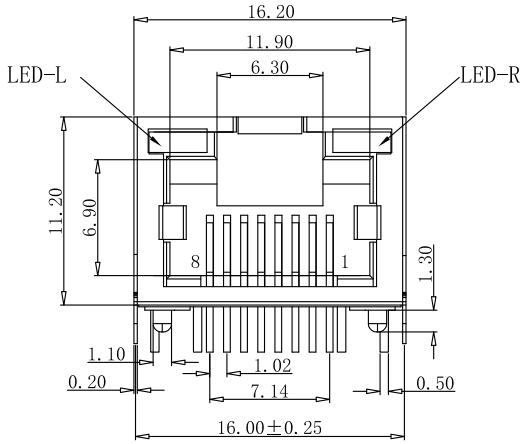

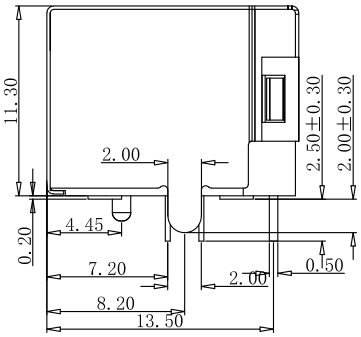

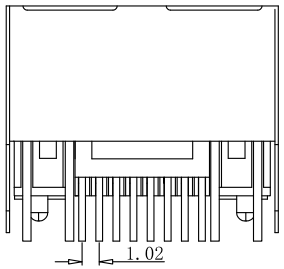

NOTES

MECHANICAL:

1. HOUSING MATERIAL: LCP BLACK UL94V-0
2. CONTACT MATERIAL: PHOSPHOR BRONZE Φ0.46mm.
3. PLATING: GOLD PLATING AT CONTACT AREA, NICKEL 30u″ MIN. OVER ALL
4. SHIELD: BRASS T=0.20mm PLATED NICKEL 30u″ Min .
5. OPERATING LIFE:750 CYCLES MIN.
6. MATING/UNMATING FORCE: 30N/3.06KGf MAX
7. RETENTION STRENGTH:50N MIN. FOR 60S±5S

ELECTRICAL:

1. VOLTAGE RATING: 125 VAC RMS.
2. CURRENT RATING: 1.5 AMP.
3. CONTACT RESISTANCE : 30mΩ MAX.
4. INSULATION RESISTANCE: 1000MΩ MIN. AT 500V DC .
5. DIELECTRIC STRENGTH:1000V AC OR 1500V DC RMS AT 0.5mA 50Hz/60Hz FOR 1MINUTE.
6. LED OPERATION VOLTAGE:1.8~2.6V.
7. LED OPERATION CURRENT:20 mA max.

ENVIRONMENTAL:

1. STORAGE: -40℃ TO +85℃ RELATIVE HUMIDITY<80%.
2. GUARANTEE PERIOD:12 MONTHS
3. OPERATION: -40℃ TO +85℃.

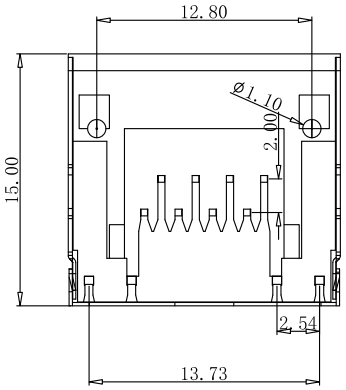

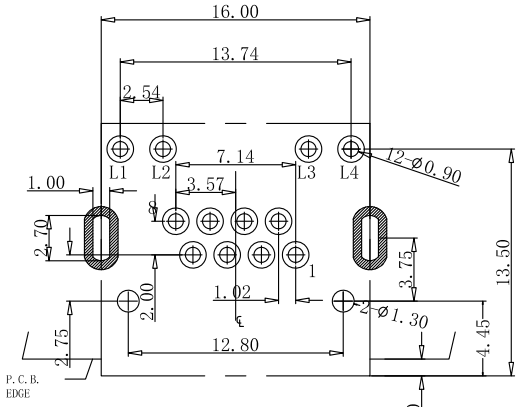

RECOMMENDED PCB LAYOUT

TOLERANCE:±0.05

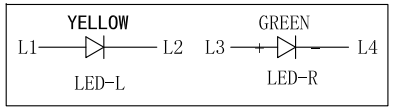

P/N:RJ5JE-8811-1111412

LED STYLE
0-W/O LED
1-Y/G
2-G/Y
3-R/G

GOLD PLATING
1-Gold Flash
2-1u
3-1.5u
4-3u
5-6u

PLASTIC
1-PBT
2-NYLON66
3-NYLON46
4-LCP

COLOR
1-BLACK
2-WHITE
3-RED
4-YELLOW

REV	ECN NO	DESCRIPTION	DATE	SIGNATURE
A0		NEW DESIGN	2020/03/12	

GENERAL TOLERANCE			
.X	±0.35	X.°	± 2°
.XX	±0.25	.X°	± 1°
.XXX	±0.15	.XX°	± 0.5°

PROJECT

DRAWN	Gene Li	2020/03/12	UNIT	MM
CHECKE	TM		SCALE	1:1
APPROVE			SHEET	
DRAWING NO			REV	A0

X-SHUN 东莞市祥舜电子科技有限公司
DONGGUAN X-SHUN ELECTRONICTECHNOLOGY CO., LTD
TEL:+86 769 81885389
FAX:+86 769 81887859
E-Mail:sales@x-shun.com
Http:www.x-shun.com

PART NO.	RJ5JE-8811-1111412
TITLE	RJ45 JACK 8P8C SHIELD WITH LED