RoHS compliant

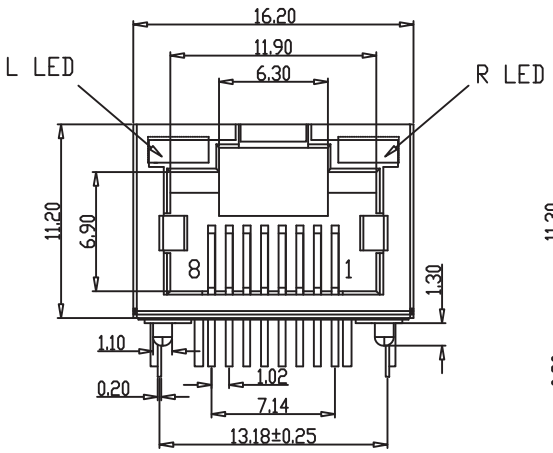

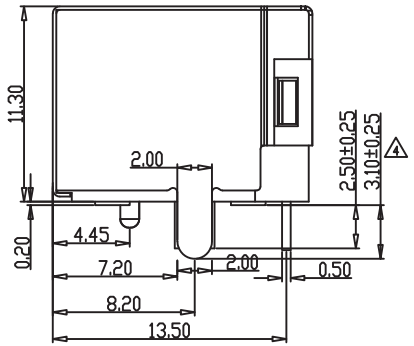

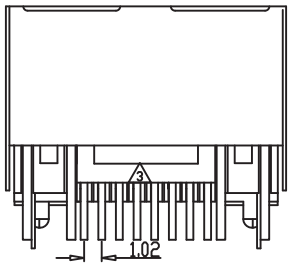

NOTES

MATERIAL

1. HOUSING MATERIAL	: PBT/LCP/PA46 UL94V-0.
2. CONTACT MATERIAL	: PHOSPHOR BRONZE ϕ0.46mm.
3. PLATING	: GOLD PLATING OVER NICKEL.
	: FU″, 3U″, 6U″, 15U″, 30U″, 50U″.
4. SHIELD	: 0.20mm THICKNESS COPPER ALLOY WITH NICKEL PLATED.

ELECTRICAL

1. VOLTAGE RATING	: 125 VAC RMS.
2. CURRENT RATING	: 1.5 AMP.
3. CONTACT RESISTANCE	: 30 MILLIOHMS MAX.
4. INSULATION RESISTANCE	: 500 MEGOHMS MIN @ 500V DC .
5. DIELECTRIC RESISTANCE	: 1000V AC RMS 50Hz. 1MIN.

MECHANICAL

1. DURRABILITY	: 750 CYCLES MIN.
2. PCB RETENTIONPRE-SOLDER	: 1 LB MIN.

ENVIRONMENTAL:

1. STORAGE	: -40℃～+85℃.
2. OPERATION	: -40℃～+85℃.

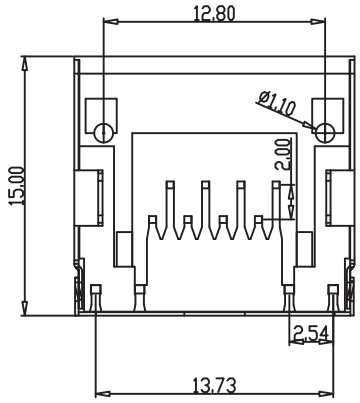

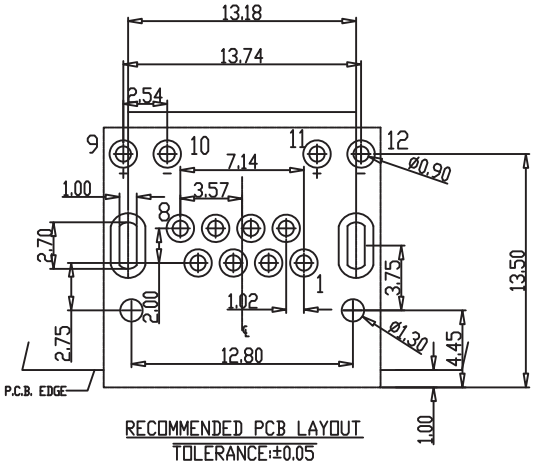

RECOMMENDED PCB LAYOUT
TOLERANCE:±0.05

P/N:RJ5JE-8811-12XXX11

SHIELD	BACK PEG	LED STYLE	GOLD PLATING	PLASTIC	COLOR	NOTE
0-W/O SHIELD 1-W/SHIELD 2-W/ EMI	0-W/O BACK PEG 1-Straight Foot 2-Bending Foot	0-W/O LED 1-Y/G 2-G/Y 3-R/G	1-Gold Flash 2-1u 3-1.5u 4-3u 5-6u	1-PBT 2-NYLON66 3-NYLON46 4-LCP	1-BLACK 2-WHITE 3-RED 4-YELLOW	X-NO NOTE 1-LRON FOOT 3.1

					GENERAL TOLERANCE		DRAWN	Gene Li	2015/07/12	UNIT	MM	X-SHUN 东莞市祥舜电子科技有限公司 DONGGUAN X-SHUN ELECTRONICTECHNOLOGY CO., LTD
					.X ±0.35	X.° ± 2°	CHECKE	TM		SCALE	1:1	TEL:+86 769 81885389 FAX:+86 769 81887859 E-Mail:sales@x-shun.com Http:www.x-shun.com
A0		NEW DESIGN	2015/07/12		.XX ±0.25	.X° ± 1°	APPROVE			SHEET		PART NO. RJ5JE-8811-12XXX11
REV	ECN NO	DESCRIPTION	DATE	SIGNATURE	.XXX ±0.15	.XX° ± 0.5°	DRAWING NO			REV	A0	TITLE 5JE 8P8C W/SHIELD W/LED, F=3.1MM
					PROJECT							