RoHS compliant

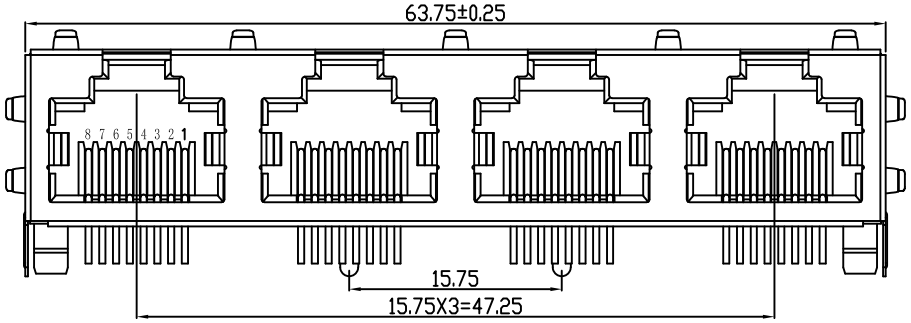

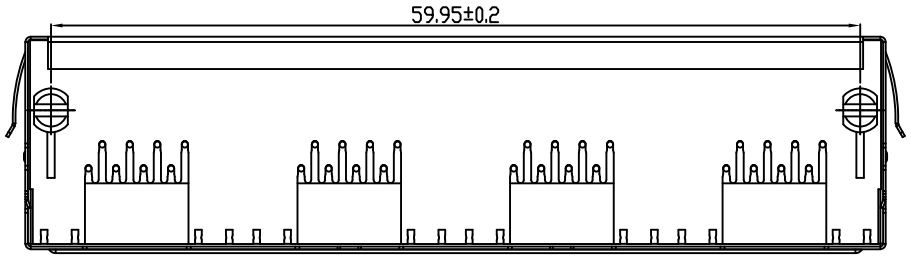

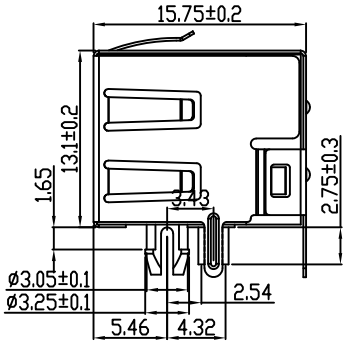

NOTES:
ELECTRICAL:
1. VOLTAGE RATING: 125V AC.
2. CURRENT RATING: 1.5A.
3. CONTACT RESISTANCE: 30 mΩ MAX.
4. INSULATION RESISTANCE: 500 MΩ MIN @ 500V DC.
5. DIELECTRIC STRENGTH: 1000V AC 50Hz or 60Hz,1MIN.
MECHANICAL:
1. INSERT MATERIAL: UL94V-0.
2. CONTACT MATERIAL: ø0.46mm C51000(QSn4-0.3)PHOSPHOR BRONZE GOLD PLATING OVER NICKEL.
3. SHIELD: 0.20mm THICKNESS H65Y BRASS NICKEL PLATED.
4. MATING/UNMATING FORCE: 2.2KG.F MAX.
5. RETENTION STRENGTH: 5.0KG.F MIN BETWEEN JACK AND PLUG.
6. OPERATING LIFE: 750 CYCLES MIN.
ENVIRONMENTAL:
1. STORAGE: -40℃ ～ +85℃ RELATIVE HUMIDITY<70%.
2. OPERATION: -40℃ ～ +85℃.

P/N:RJ5JA-8814-220XXXR

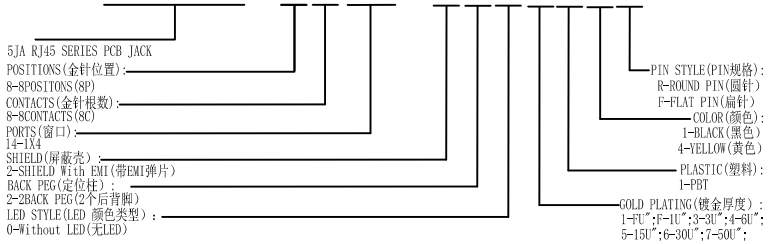

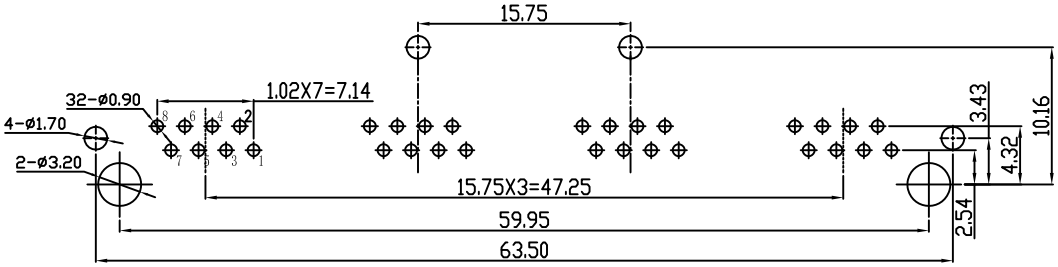

PC Board Layout

					GENERAL TOLERANCE		DRAWN	Gene Li	2017/08/12	X-SHUN 东莞市祥舜电子科技有限公司 DONGGUAN X-SHUN ELECTRONIC TECHNOLOGY CO., LTD			
					.X ±0.35	X.° ± 2°	CHECKE	SC					
A0		NEW DESIGN	2017/08/12		.XX ±0.25	.X° ± 1°				PART NO.	RJ5JA-8814-220XXXR		
					.XXX ±0.15	.XX° ± 0.5°	APPROVE			TITLE:	5JA RJ45 8P8C 1X4 EMI PCB JACK		
REV	ECN NO	DESCRIPTION	DATE	SIGNATURE	PROJECT		UNIT mm	SCALE 1:1	SHEET 1/1	REV A0	DRAWING NO.	R-H5JA-21	