RoHS compliant

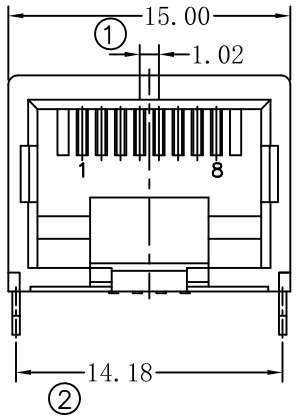

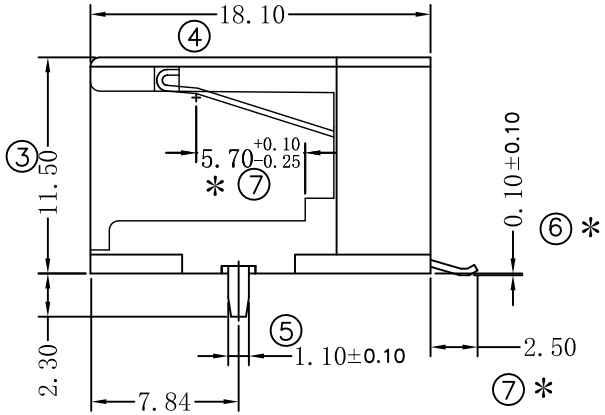

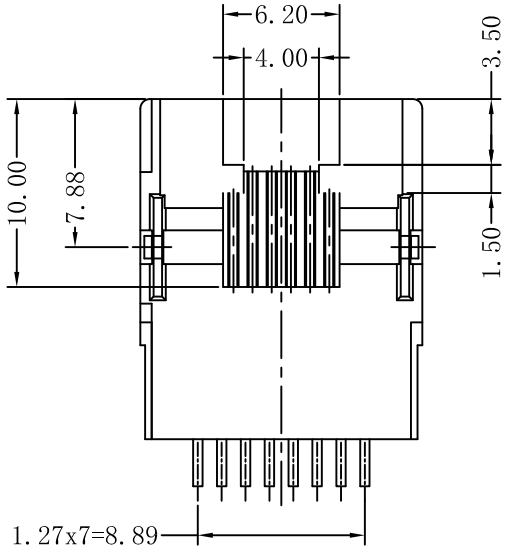

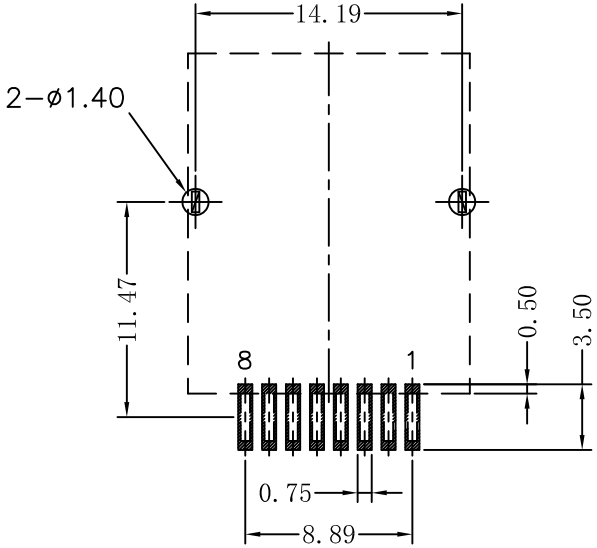

PCB LAYOUT/TOP VIEW

NOTES

MATERIAL
1. HOUSING MATERIAL : HIGH TEMP THERMOPLASTIC FLAMMABILITY RATING UL94V-0.
2. CONTACT MATERIAL : PHOSPHOR BRONZE T=0.3mm.
3. PLATING : GOLD LATING OVER NICKEL IN CONTACT TIN PLATING OVER NICKEL IN SOLDER AREA.
: FU″, 3U″, 6U″, 15U″, 30″, 50″.

ELECTRICAL
1. VOLTAGE RATING : 125 VAC RMS.
2. CURRENT RATING : 1.5 AMP.
3. CONTACT RESISTANCE : 40 MILLIOHMS MAX.
4. INSULATION RESISTANCE : 1000 MEGOHMS MIN @ 500V DC .
5. DIELECTRIC RESISTANCE : 1000V AC RMS 50Hz. 1MIN.

MECHANICAL
1. DURRABILITY : 750 CYCLES MIN.
2. PCB RETENTIONPRE-SOLDER : 1 LB MIN.

ENVIRONMENTAL:
1. STORAGE : -40℃～+85℃.
2. OPERATION : -20℃ TO 75℃.

Mates With Modular Plug Conforming To FCC Part 68, Subpart F.

P/N:RJ56S-8811-030551X

56S RJ45 90° SMT SERIES PCB JACK
POSITIONS(金针位置):
8-8POSITONS(8P)
CONTACTS(金针根数):
8-8CONTACTS(8C)
PORTS(窗口):
11-1X1
SHIELD(屏蔽壳):
0-Without SHIELD(无屏蔽壳)
IRON PEG(铁脚定位脚):
3-IRON Feet DIP(定位脚直插)
HOUSING PEG(塑胶定位柱):
0-Without PEG(无定位柱)
PACKING TYPE(包装):
1-RELL(卷带包装)
2-PVC TRAY(盘装)
COLOR(颜色):
1-BLACK(黑色)
7-BLUE(蓝色)
PLASTIC(塑料):
4-LCP;5-PA9T
GOLD PLATING(镀金厚度):
1-1U″;5-6U″;6-15U″
7-30U″;8-50U″;

REV	ECN NO	DESCRIPTION	DATE	SIGNATURE
A0		NEW DESIGN	2019/11/21	

GENERAL TOLERANCE

.X	±0.35	X.°	± 2°
.XX	±0.25	.X°	± 1°
.XXX	±0.15	.XX°	± 0.5°

PROJECT

DRAWN	Gene Li	2019/11/21
CHECKE	HC	
APPROVE		

UNIT mm SCALE 1:1 SHEET 1/1

X-SHUN 东莞市祥舜电子科技有限公司
DONGGUAN X-SHUN ELECTRONIC TECHNOLOGY CO., LTD

PART NO.	RJ56S-8811-030551X
TITLE:	RJ45 8P8C 90° SMT PCB JACK
REV A0	DRAWING NO. RJ56S-88